English

Technical Details

RV01 - 29/02/2016

Model CHRISTIE

Technical Information

Frame	Frame of pine wood and MDF
Seat Suspension	Lifetime guarantee
Back Suspension	Webbing 80mm
Seat Foam	35kg foam on seat cushions+fibre
Seat Firmness	Medium Foam (white) *
Back Cushions	Foam 30Kg + 400grs.
Loose Cushions	Fibre fibersilk 100%
Legs Options	Wooden feet/ Optional table
Colors	Natural, Cherry, Walnut, Wengue, lacquered silver, lacquered black, champagne
Comments:	* You would like to know more? Check the FAQS section in our website

Frame and seat suspension

Lifetime guarantee

Rest of Pieces 2 years*

*6-month guaranty extension by activating it on the web

Cushions Measures

Lumbar cushion 50X30

Measures

Width	90 cm
Heigth	103 cm
Depth	90 cm
Seat Height	47 cm
Arm Height	70 cm
Back Height	64 cm
Depth when open	- cm
Net Weight	- kg
Gross Weight	- kg
Volume m3	- m3

Scheme

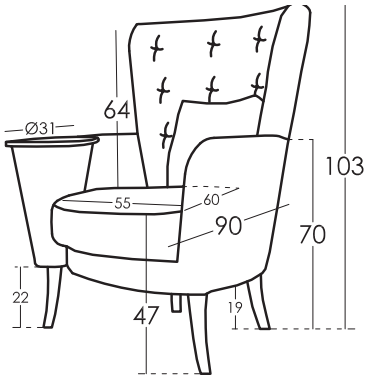

Packaging

Shrink wrapping plastic packaging with protective corner brackets

Options

Types of Standard Foam

Hardness: Soft: Grey colour 35Kg	Hardness: Medium: White colour 35Kg	Hardness: Hard: Green colour 30Kg

Types of Fire Retardant Foam

Hardness: Medium: Grey colour 41Kg	Hardness: Soft: White colour 36Kg

* You can request a different seat hardness from the standard of the model with a small price increase

CHRISTIE is manufactured by Fama Sofás, whose quality system is certified by AENOR and IQNET, according to ISO 9001-2015, with certificate number ES-0790/1999.

All models have passed the tests required for granting the quality control label from Aidima-Cetem laboratories.

Enjoy the new design made in Spain

fama